XBOX 360

Rapala® PRO BASS FISHING

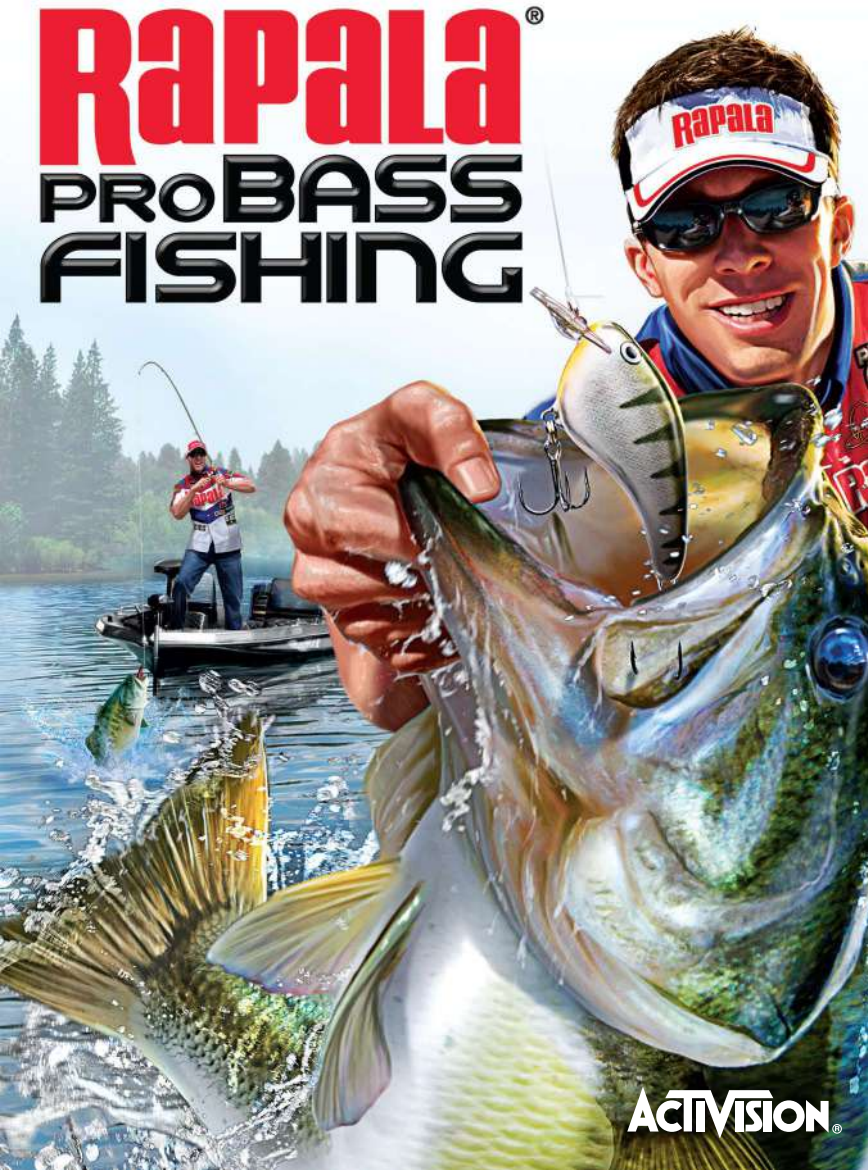

ACTIVISION®

WARNING Before playing this game, read the Xbox 360® console and accessory manuals for important safety and health information. Keep all manuals for future reference. For replacement console and accessory manuals, go to **www.xbox.com/support**.

Important Health Warning About Playing Video Games

Photosensitive seizures
A very small percentage of people may experience a seizure when exposed to certain visual images, including flashing lights or patterns that may appear in video games. Even people who have no history of seizures or epilepsy may have an undiagnosed condition that can cause these "photosensitive epileptic seizures" while watching video games.

These seizures may have a variety of symptoms, including lightheadedness, altered vision, eye or face twitching, jerking or shaking of arms or legs, disorientation, confusion, or momentary loss of awareness. Seizures may also cause loss of consciousness or convulsions that can lead to injury from falling down or striking nearby objects.

Immediately stop playing and consult a doctor if you experience any of these symptoms. Parents should watch for or ask their children about the above symptoms—children and teenagers are more likely than adults to experience these seizures. The risk of photosensitive epileptic seizures may be reduced by taking the following precautions: Sit farther from the screen; use a smaller screen; play in a well-lit room; do not play when you are drowsy or fatigued.

If you or any of your relatives have a history of seizures or epilepsy, consult a doctor before playing.

Rapala® Pro Bass Fishing

CONTROLS 2

XBOX LIVE® 4

CONNECTING 4

FAMILY SETTINGS 4

MAIN MENU 4

TOURNAMENT 3

TWO PLAYERS 4

FREE FISHING 4

GAMEPLAY & DISPLAYS 5

DRIVING 5

NAVIGATION & FISHING SPOTS 6

CASTING 6

RETRIEVING 6

FIGHTING FISH 7

USING THE TACKLE BOX 7

SOFTWARE LICENSE AGREEMENT 9

CUSTOMER SUPPORT . . . . . BACK PAGE

DEFAULT FISHING CONTROLS

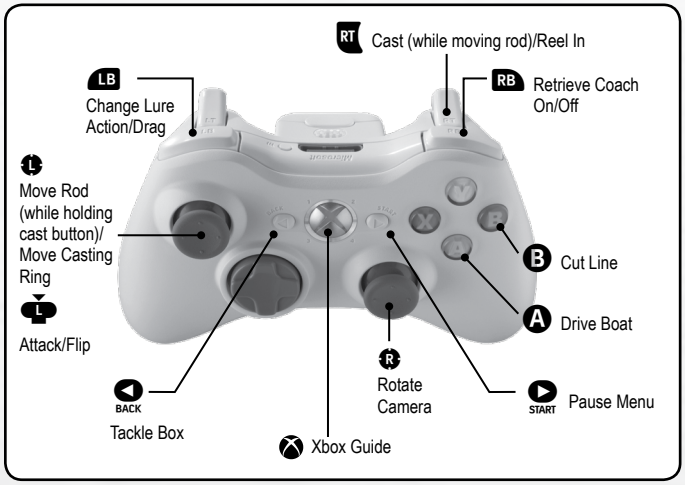

DEFAULT DRIVING CONTROLS

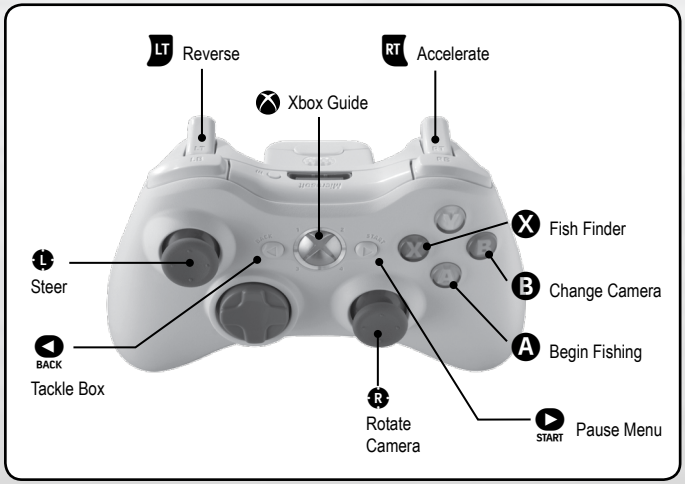

RAPALA® ROD & REEL FISHING CONTROLS

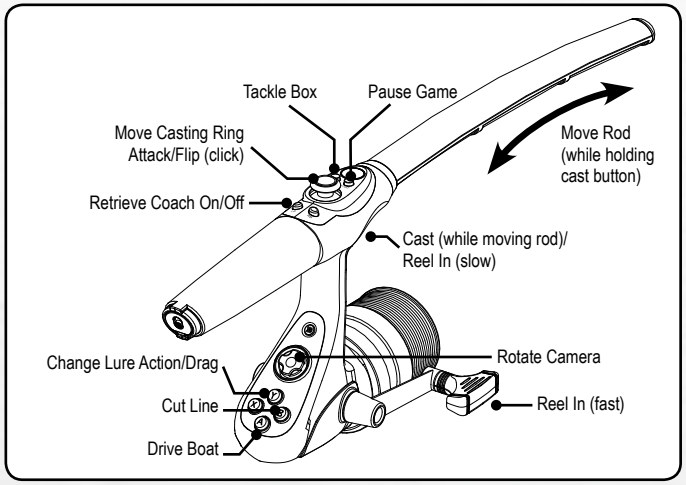

RAPALA® ROD & REEL DRIVING CONTROLS

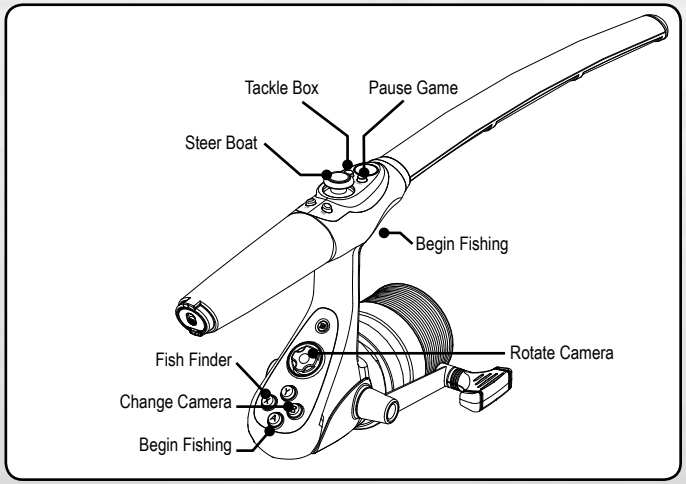

XBOX LIVE

Xbox LIVE® is your connection to more games, more entertainment, more fun. Go to **www.xbox.com/live** to learn more.

CONNECTING

Before you can use Xbox LIVE, connect your Xbox 360 console to a high-speed Internet connection and sign up to become an Xbox LIVE member.

For more information about connecting, and to determine whether Xbox LIVE is available in your region, go to **www.xbox.com/live/countries**.

FAMILY SETTINGS

These easy and flexible tools enable parents and caregivers to decide which games young game players can access based on the content rating. Parents can restrict access to mature-rated content. Approve who and how your family interacts with others online with the Xbox LIVE service, and set time limits on how long they can play. For more information, go to **www.xbox.com/familysettings**.

MAIN MENU

From the Main Menu screen, you can: Enter **TOURNAMENT** and begin your quest for the Rapala® trophy; fish with a buddy in **TWO PLAYERS**; fish at your own pace in **FREE FISHING**; change your angler's clothes and boat in **OUTFIT ANGLER**; change control sets, adjust settings and save your current profile in **OPTIONS**; and view Leaderboards, stats, unlockables and the Fish-o-Pedia in **EXTRAS**.

TOURNAMENT

Begin your quest for the Rapala® trophy here! There are **3 SEASONS** and each season is made up of **4 TIERS** of events. Unlock higher tiers by completing events. You do not need to compete in every event in a tier to win the Rapala® trophy – you only need to finish the season with the most **SEASON POINTS**.

Season points are awarded at the end of each event and the number of points you earn is based on your rank in that event. Each event also has a secondary objective that can be completed for additional season points. Check the **OBJECTIVES** screen in the in-game Pause Menu.

TWO PLAYERS

Two players can enter this mode to fish at their own pace or compete against each other in fishing and angling challenges placed around each lake. To fish, first select your anglers and enter one of the lakes. To begin a challenge, look for the red rings on the water and drive your boat over one to start competing (Player 1 is always is always the driver). All fishing is done above-water, so keep an eye on your underwater camera.

FREE FISHING

As in Two Player, Free Fishing lets you head out alone and fish at your own pace or test your skills against fishing and angling challenges. Just select a lake, time of day and weather and you're ready to go.

GAMEPLAY & DISPLAYS

DRIVING

Score: Can be your total fish weight, number of fish caught or whatever the main objective is in an event.

Timer: Shows how much time is left in the event.

Fishfinder/GPS Map: Shows where fish are hiding underwater. Switch between Fishfinder and GPS map views.

NAVIGATION & FISHING SPOTS

To win tournament events, you need to find the best fishing spots. To do this, watch for clues above the water like circling birds, hot air balloons and crowds of spectators on the shoreline – these are often near fishing spots. Also, pay attention to your Fishfinder/GPS Map when driving. The best spots in the lake have large, green markers on the GPS map.

CASTING

Casting Ring (yellow): Move this ring around the water to set a visual target for your cast. If it turns green, it's over a fishing spot. Hit the ring with your cast and you'll get an instant attract bonus on your lure.

Casting Line (blue): It appears when holding the casting button and moving your rod up and down. It shows how far your lure can cast. Use it with the Casting Ring to help in aiming your cast.

RETRIEVING

Depth: Shows the depth of your lure.

Distance (Dist.): How far your lure is from the boat.

Retrieve Coach: Shows which **special retrieve technique** is currently assigned to your lure. Perform these techniques to increase the attractiveness of your lure. Follow the Coach's on-screen prompts to perform these techniques.

Drag: Shows your current drag setting when a fish is on your line. Adjust it to better manage your Hook Stability. Drag unlocks later in Tournament and is not available in the first events.

Special Retrieve Techniques

When reeling in a lure, use either of its special retrieve techniques to make it more attractive to its target fish. This is essential to catching more and bigger fish and winning tournament events. You can switch between the techniques at any time you are reeling in the lure. Follow the on-screen prompts of the Retrieve Coach. When you are doing it right, you will hear special music play.

FIGHTING FISH

When a fish is on your line, knowing when to move your rod and when to reel in is essential to bringing it into the boat!

Arrows: Show you how to move your rod and are essential to watch if you want to catch a fish! They appear at different moments during the fight.

1. **Fish Strike:** When a fish strikes your lure, snap your rod in the arrow's direction for a perfect hook.
2. **Fight:** Move your rod in the arrow's direction to bring the fish back to the center. Warning! If you reel in when the fish is on the sides, your Hook Stability will quickly decrease and you could lose the fish!
3. **Attacks:** When you activate an Attack after filling your Attack Bar (see below), move your rod in the arrow's direction when it appears. Do this correctly and you can quickly reel in for short time!

Attack Bar: Fill up the Attack Bar by reeling in only when the fish is in the center of the screen.

Hook Stability: This treble hook shows how stable the hook is in the fish's mouth. Hooks disappear over time if the fish is not kept in the center of the screen. When they're gone, the fish will escape. TIP: Counteracting an Attack correctly will also increase your Hook Stability.

Escapes: Fish may try to escape during the fight. Counter its Escape by following the on-screen prompts.

USING THE TACKLE BOX

Change your gear in the Tackle Box. Select from lures, lines, rods, and reels. For lures, you can choose different sizes, colors and types. You can also see info on the highlighted gear item in the Fish-o-Pedia available in the Pause Menu.

Tackle Selection
Picking the right gear for your target fish is critical to catching and winning. When you open the Tackle Box, your target fish is displayed with a 5-star meter underneath. This meter tells you how interested the fish will be in your current gear set. Lures and lines affect this meter.

Lures
Different species like different lures (and different lure sizes). TIP: Use small-sized lures for smaller fish (like Crappies) and large-sized lures for the biggest fish (like Muskie and Sturgeon). Experiment with lure colors in different types of water to see what works best.

Lines
Choosing the right line for the right size fish is critical. Use thinner line for smaller fish like Crappies and thicker line for bigger fish. TIP: If you use a line that is too thin for the fish you're going after, you can lose the fish much more quickly during the fight (Hook Stability decreases faster). And thicker line may scare smaller fish away.

Rods & Reels
Every rod and reel has a different casting Precision and Distance rating. This affects how well you can cast and hit the Casting Ring. Baitcasting reels allow you to brake the lure in mid-flight to be more precise with your cast. TIP: Longer casts allow for longer retrieves which give you more time to attract fish.

Fish-O-Pedia
The Fish-o-Pedia is a wealth of fishing knowledge. You can access it from EXTRAS in the Main Menu, in the Pause Menu during gameplay and in the Tackle Box. It has info on everything from the fish you're going after, to the gear you need to use, and to the pros you're fishing against.